PROPRIETARY NOTE
THIS SPECIFICATION IS THE PROPERTY OF BOE HF AND SHALL NOT BE REPRODUCED OR COPIED WITHOUT THE WRITTEN PERMISSION OF BOE HF AND MUST BE RETURNED TO BOE HF UPON ITS REQUEST

RXL215090-C **Product Specification Rev.0**

SUPPLIER	
FG-Code	RXL215090-C

ITEM	BUYER SIGNATURE	DATE

ITEM	SUPPLIER SIGNATURE	DATE
Prepared		
Reviewed		
Approved		

Contents

No.	Items	Page
1.0	General Description	4
2.0	Absolute Maximum ratings	6
3.0	Electrical specifications.	7
4.0	Interface Connection	9
5.0	Signal Timing Specifications	11
6.0	Power Sequence	12
7.0	Optical specifications.	13
8.0	Mechanical Characteristics	17
9.0	Reliability Test	18
10.0	Precautions	19
11.0	Label	23
12.0	Packing information	25
13.0	Mechanical Outline Dimension	26

1.0 GENERAL DESCRIPTION

1.0.1 Introduction

RXL215090-C is a color active matrix TFT LCD Open Cell using amorphous silicon TFT's (Thin Film Transistors) as an active switching devices. This open cell has a 21.5 inch diagonally measured active area with FHD resolutions (1920 horizontal by 1080 vertical pixel array). Each pixel is divided into RED, GREEN, BLUE dots which are arranged in vertical stripe and this open cell can display 16.7M colors.

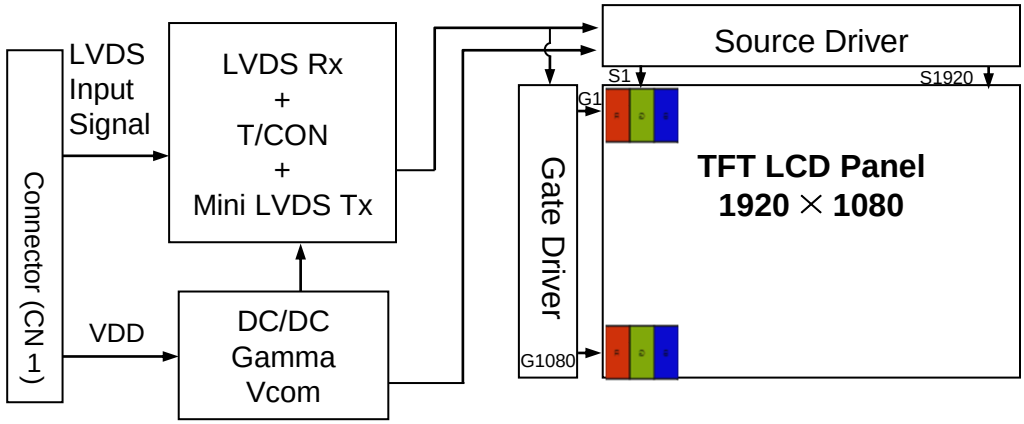

1.0.2 Features

- LVDS Interface with 2 pixel / clock
- High-speed response
- 0.5t Glass
- 6-bit (Hi-FRC) color depth, display 16. 7M colors
- High luminance and contrast ratio, low reflection and wide viewing angle
- DE (Data Enable) only
- RoHS/Halogen Free
- Gamma Correction
- Landscape and Portrait Enabled

1.0.3 Application

- Desktop Type of PC & Workstation Use
- Slim-Size Display for Stand-alone Monitor
- Display Terminals for Control System
- Monitors for Process Controller
- Digital Signage for Class Information
- Storage Cabinet for Outdoor

1.0.4 General Specification

The followings are general specifications at the model RXL215090-C

<Table 1. General Specifications>

Parameter	Specification	Unit	Remarks
Active area	476.64(H) × 268.11(V)	mm	
Number of pixels	1920(H) ×1080(V)	pixels	
Pixel pitch	0.24825(H) x 0.24825(V)	mm	
Pixel arrangement	RGB Vertical stripe	-	
Display colors	16.7M	colors	
Display mode	Normally Black	-	
Possible Display Type	Landscape and Portrait Enabled	-	
Open Cell Transmittance	3.55	%	
Weight	392	g	
Surface Treatment	Haze 25%, 3H	-	

2.0 ABSOLUTE MAXIMUM RATINGS

The followings are maximum values which, if exceed, may cause faulty operation or damage to the unit. The operational and non-operational maximum voltage and current values are listed in Table 2.

< Table 2. Absolute Maximum Ratings> [VSS=GND=0V]

Parameter	Symbol	Min.	Max.	Unit	Remarks
Power Supply Voltage	V_{DD}	-0.3	5.5	V	Ta = 25 ℃
Logic Supply Voltage	V_{IN}	VSS-0.3	V_{DD}+0.3	V	
Operating Temperature	T_{OP}	-20	+70	℃	
Storage Temperature	T_{ST}	-30	+80	℃	
Liquid crystal clear point	T_{Lc}	104.9		℃	Typ.

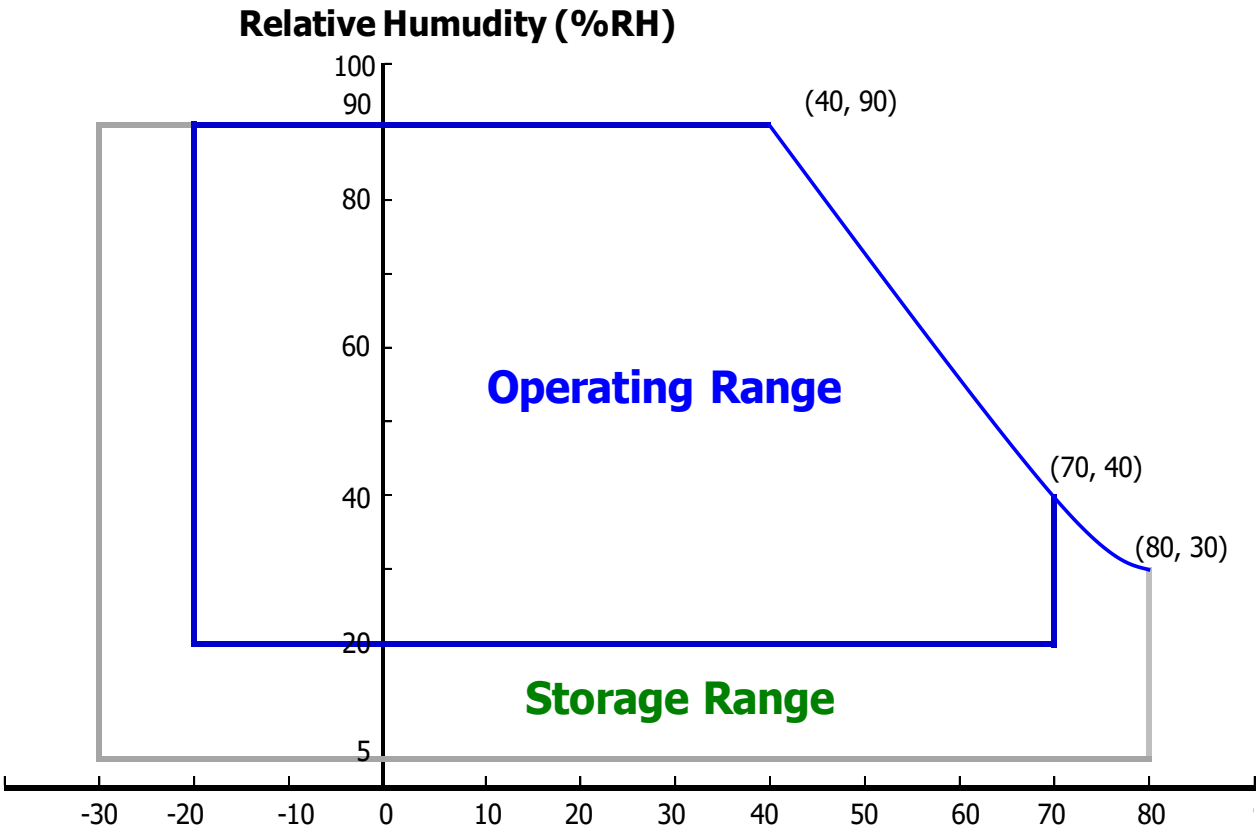

3.0 ELECTRICAL SPECIFICATIONS

3.0.1 Electrical Specifications

< Table 3. Electrical specifications > [Ta =25 ± 2 ℃]

Parameter		Min.	Typ.	Max.	Unit	Remarks
Power Supply Voltage	V_{DD}	4.5	5.0	5.5	V	**Note1**
Power Supply Current	I_{DD}	-	700	1200	mA	
In-Rush Current	I_{RUSH}	-	-	3	A	**Note 2**
Permissible Input Ripple Voltage	V_{RF}	-	-	300	mV	**V_{DD} = 5.0V**
High Level Differential Input Threshold Voltage	V_{IH}	-	-	+100	mV	
Low Level Differential Input Threshold Voltage	V_{IL}	-100	-	-	mV	
Differential input voltage	$\|V_{ID}\|$	200	-	600	mV	
Differential input common mode voltage	Vcm	1.0	1.2	1.5		V_{IH}=100mV, V_{IL}=-100mV
Power Consumption	P_D	-	28	35	W	

Notes : 1. The supply voltage is measured and specified at the interface connector of open cell.
The current draw and power consumption specified is for VDD=5.0V, Frame rate=60Hz. Test Pattern of power supply current

a) Typ : Color Bar pattern
b) Max : Gray Level 255 Pattern

2. Duration of rush current is about 2 ms and rising time of VDD is 520 μs ± 20 %

4.0 INTERFACE CONNECTION.

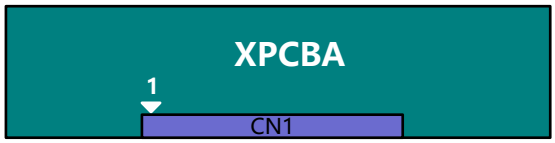

4.0.1 Electrical Interface Connection

- CN1 Module Side Connector : UJU IS100-L30O-C23 or MSBKT2407P30
  User Side Connector : JAE FI-X30H

Pin No	Symbol	Function	Remark
1	RXO0-	Negative Transmission data of Pixel 0 (ODD)	
2	RXO0+	Positive Transmission data of Pixel 0 (ODD)	
3	RXO1-	Negative Transmission data of Pixel 1 (ODD)	
4	RXO1+	Positive Transmission data of Pixel 1 (ODD)	
5	RXO2-	Negative Transmission data of Pixel 2 (ODD)	
6	RXO2+	Positive Transmission data of Pixel 2 (ODD)	
7	GND	Power Ground	
8	RXOC-	Negative Transmission Clock (ODD)	
9	RXOC+	Positive Transmission Clock (ODD)	
10	RXO3-	Negative Transmission data of Pixel 3 (ODD)	
11	RXO3+	Positive Transmission data of Pixel 3 (ODD)	
12	RXE0-	Negative Transmission data of Pixel 0 (EVEN)	
13	RXE0+	Positive Transmission data of Pixel 0 (EVEN)	
14	GND	Power Ground	
15	RXE1-	Negative Transmission data of Pixel 1 (EVEN)	
16	RXE1+	Positive Transmission data of Pixel 1 (EVEN)	
17	GND	Power Ground	
18	RXE2-	Negative Transmission data of Pixel 2 (EVEN)	
19	RXE2+	Positive Transmission data of Pixel 2 (EVEN)	
20	RXEC-	Negative Transmission Clock (EVEN)	
21	RXEC+	Positive Transmission Clock (EVEN)	
22	RXE3-	Negative Transmission data of Pixel 3 (EVEN)	
23	RXE3+	Positive Transmission data of Pixel 3 (EVEN)	
24	GND	Power Ground	Note 1
25	NC	Not connection, this pin should be open	
26	NC	Not connection, this pin should be open	
27	NC	Not connection	
28	VDD	Power Supply: +5V	
29	VDD		
30	VDD		

Note 1 : This pin should be connected with GND.

4.0.2 Data Input Format

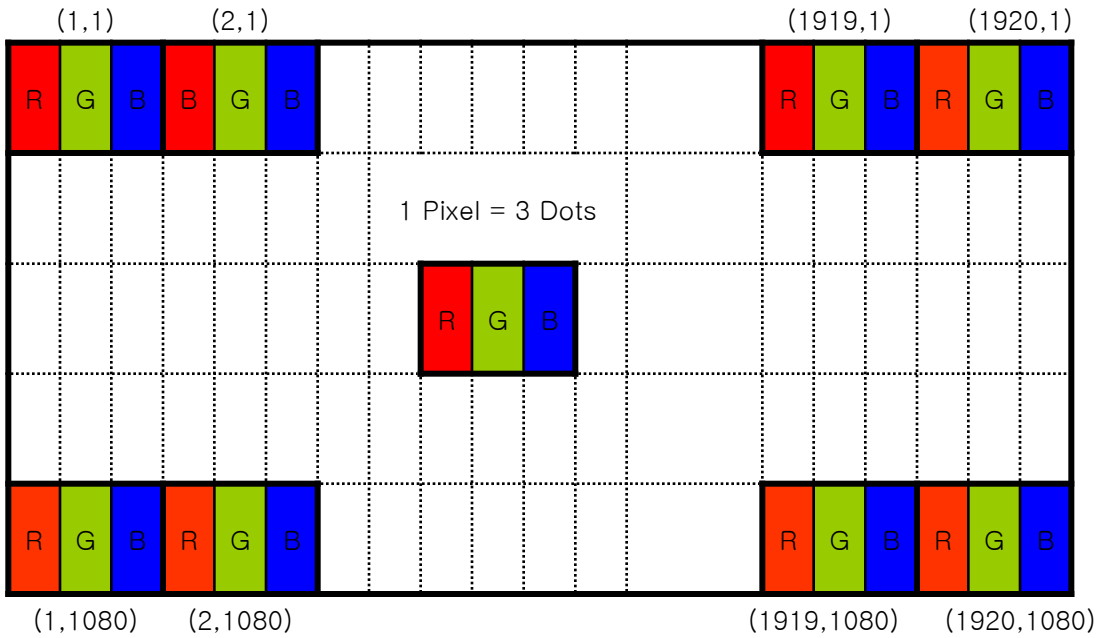

Display Position of Input Data (V-H)

5.0 SIGNAL TIMING SPECIFICATION

5.0.1 The RXL215090-C is operated by the DE only.

Item		Symbols	Min	Typ	Max	Unit
Clock	Frequency	1/Tc	63	74.25	88	MHz
	High Time	-	-	4/7Tc	-	
	Low Time	-	-	3/7Tc	-	
Frame Period		Tv	1100	1125	1200	line
			55	60	65	Hz
			15.38	16.67	18.18	ms
Vertical Display Period		Tvd	-	1080	-	line
One line Scanning Period		Th	1050	1100	1120	clocks
Horizontal Display Period		Thd	-	960	-	clocks

5.0.2 LVDS Rx Interface Timing Parameter

The specification of the LVDS Rx interface timing parameter is shown in Table 4.

<Table 4. LVDS Rx Interface Timing Specification>

Item	Symbol	Min	Typ	Max	Unit	Remark
CLKIN Period	tRCIP	10.76	13.46	16.15	nsec	
Input Data 0	tRIP1	-0.4	0.0	+0.4	nsec	
Input Data 1	tRIP0	tRCIP/7-0.4	tRCIP/7	tRCIP/7+0.4	nsec	
Input Data 2	tRIP6	2 ×tRCIP/7-0.4	2 ×tRCIP/7	2 ×tRCIP/7+0.4	nsec	
Input Data 3	tRIP5	3 ×tRCIP/7-0.4	3 ×tRCIP/7	3 ×tRCIP/7+0.4	nsec	
Input Data 4	tRIP4	4 ×tRCIP/7-0.4	4 ×tRCIP/7	4 ×tRCIP/7+0.4	nsec	
Input Data 5	tRIP3	5 ×tRCIP/7-0.4	5 ×tRCIP/7	5 ×tRCIP/7+0.4	nsec	
Input Data 6	tRIP2	6 ×tRCIP/7-0.4	6 ×tRCIP/7	6 ×tRCIP/7+0.4	nsec	

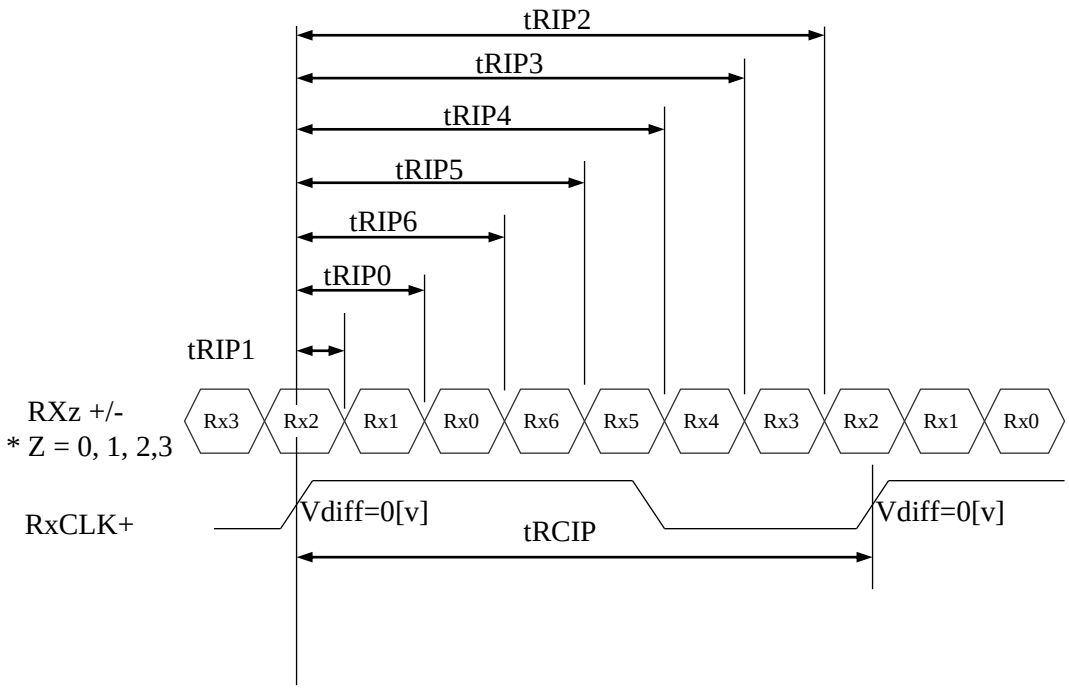

* Vdiff = (RXz+)-(RXz-),…. ,(RXCLK+)-(RXCLK-)

6.0 POWER SEQUENCE

To prevent a latch-up or DC operation of the LCD module, the power on/off sequence shall be as shown in below

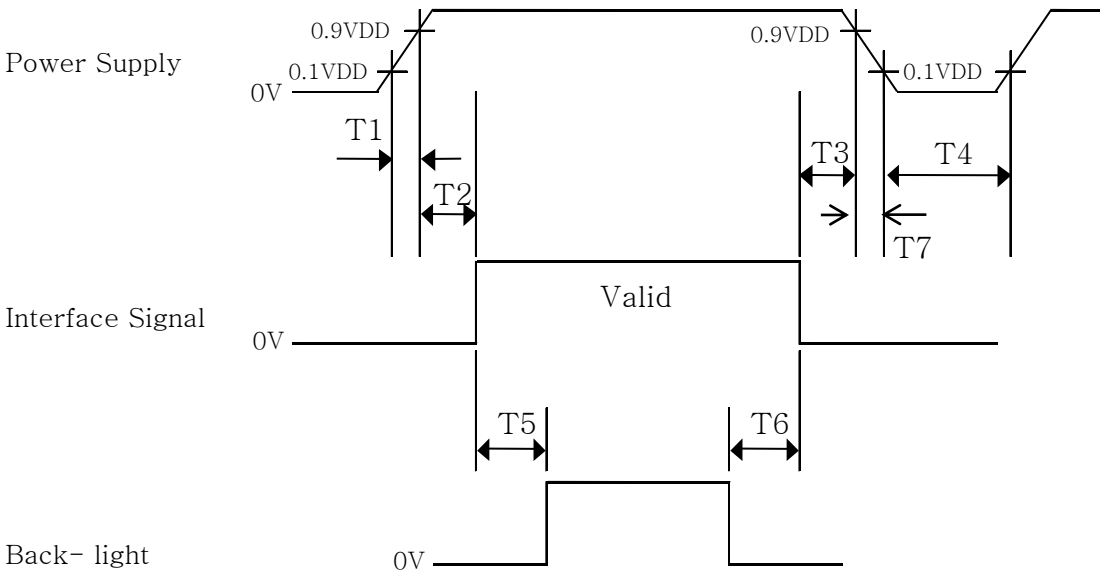

- 0.5 ms ≤ T1 ≤ 10 ms
- 0 ≤ T2 ≤ 50 ms
- 0 ≤ T3 ≤ 50 ms
- 1 sec ≤ T4
- 200 ms ≤ T5
- 200 ms ≤ T6

Notes:

1. When the power supply VDD is 0V, keep the level of input signals on the low or keep high impedance.
2. Do not keep the interface signal high impedance when power is on.
3. Back Light must be turn on after power for logic and interface signal are valid.
4. T7 decreases smoothly, there is none re-bouncing voltage.
5. During changing the resolution or mode changing, the logic power/ back-light/interface signal should be turned off as shown above; after the changing, power on as shown above.

7.0 OPTICAL SPECIFICATION

7.0.1 Overview

The test of Optical specifications shall be measured in a dark room (ambient luminance ≤ 1 lux and temperature = 25±2°C) with the equipment of Luminance meter system (Goniometer system and TOPCONE PR730) and test unit shall be located at an approximate distance 50cm from the LCD surface at a viewing angle of θ and Φ equal to 0°. We refer to $\theta_{Ø=0}$ (=θ_3) as the 3 o'clock direction (the "right"), $\theta_{Ø=90}$ (= θ_{12}) as the 12 o'clock direction ("upward"), $\theta_{Ø=180}$ (= θ_9) as the 9 o'clock direction ("left") and $\theta_{Ø=270}$(= θ_6) as the 6 o'clock direction ("bottom"). While scanning θ and/or Ø, the center of the measuring spot on the Display surface shall stay fixed. The measurement shall be executed after 30 minutes warm-up period. VDD shall be 5.0V +/-10% at 25°C. Optimum viewing angle direction is 6 'clock.

7.0.2 Optical Specifications

[VDD = 5.0V, Frame rate = 60Hz, Clock = 74.25MHz, Ta =25 ± 2 ℃]

< Table 5. Open Cell Optical >

Parameter		Symbol	Condition	Min.	Typ.	Max.	Unit	Remark
Viewing Angle range	Horizontal	Θ_3	CR > 10	85	89	-	Deg.	Note 2
		Θ_9		85	89	-	Deg.	
	Vertical	Θ_{12}		85	89	-	Deg.	
		Θ_6		85	89	-	Deg.	
Luminance Contrast ratio		CR	Θ = 0° (Center) Normal Viewing Angle	700	1000			Note 3
Luminance of White		Tr		-	900	1000	cd/m2	Note 4
White luminance uniformity		ΔY		75	80	-	%	Note 5
Reproduction of color	White	W_x		0.283	0.313	0.343	-	Note 6 (BOE BL)
		W_y		0.299	0.329	0.359	-	
	Red	R_x		0.609	0.639	0.669	-	
		R_y		0.319	0.349	0.379	-	
	Green	G_x		0.267	0.297	0.327	-	
		G_y		0.586	0.616	0.646	-	
	Blue	B_x		0.119	0.149	0.179	-	
		B_y		0.020	0.050	0.080	-	
Response Time	GTG	T_g			14	25	ms	Note 7
Cross Talk		CT		-	-	2.0	%	Note 8

Note :

1. The value in upper table are based on BLU provided by BOEDT.
2. Viewing angle is the angle at which the contrast ratio is greater than 10. The viewing are determined for the horizontal or 3, 9 o'clock direction and the vertical or 6, 12 o'clock direction with respect to the optical axis which is normal to the LCD surface.
3. Contrast measurements shall be made at viewing angle of θ= 0° and at the center of the LCD surface. Luminance shall be measured with all pixels in the view field set first to white, then to the dark (black) state. (See FIGURE 1 shown in Appendix) Luminance Contrast Ratio (CR) is defined mathematically.

$$CR = \frac{\text{Luminance when displaying a white raster}}{\text{Luminance when displaying a black raster}}$$

4. Luminance of LCD module shall be made without signal input. Cell transmittance is defined mathematically, BLU provided by BOEDT.

$$\text{Transmittance} = \frac{\text{Luminance of LCD Module}}{\text{Luminance of BLU}}$$

5. The White luminance uniformity on LCD surface is then expressed as :
   ΔY = (Minimum Luminance of 9points / Maximum Luminance of 9points) * 100
   (See FIGURE 2 shown in Appendix).
6. The color chromaticity coordinates specified in Table 5. shall be calculated from the spectral data measured with all pixels first in red, green, blue and white. Measurements shall be made at the center of the panel.
7. The electro-optical response time measurements shall be made as FIGURE 3 shown in Appendix by switching the "data" input signal ON and OFF. The times needed for the luminance to change from 10% to 90% is Td, and 90% to 10% is Tr.



8. Cross-Talk of one area of the LCD surface by another shall be measured by comparing the luminance (Y_A) of a 25mm diameter area, with all display pixels set to a gray level, to the luminance (Y_B) of that same area when any adjacent area is driven dark. (See FIGURE 4 shown in Appendix).

7.0.3 Optical measurements

Figure 1. Measurement Set Up

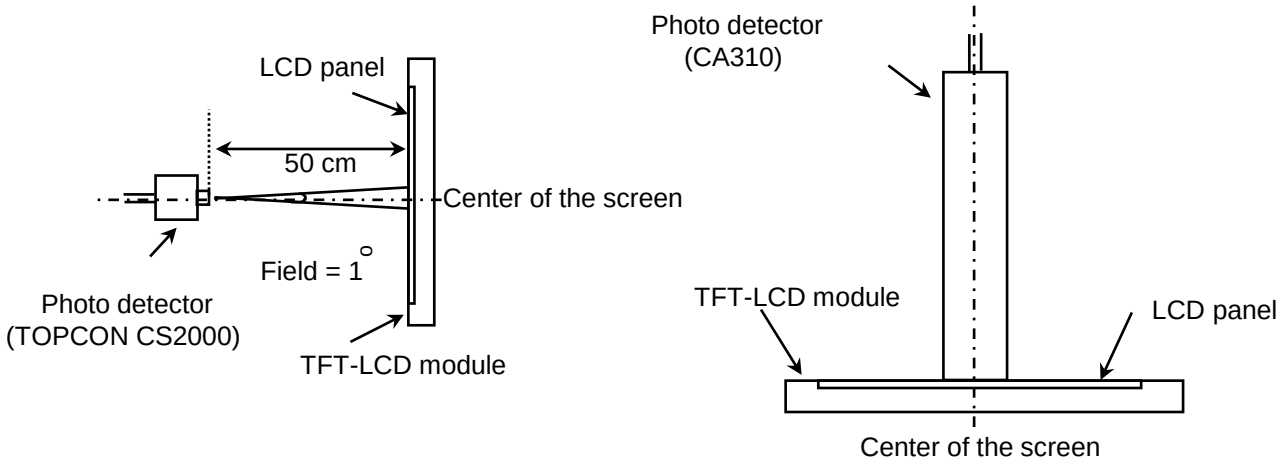

View angel range, uniformity, etc. measurement setup Flicker, measurement setup

Figure 2. White Luminance and Uniformity Measurement Locations (9 points)

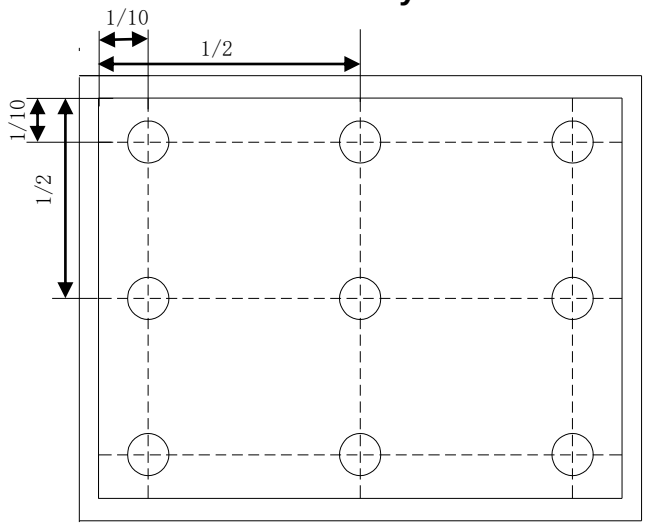

Luminance of white is defined as luminance values of center of the LCD surface. Luminance shall be measured with all pixels in the view field set first to white. This measurement shall be taken at the locations shown in FIGURE 2 for a total of the measurements per display.
The White luminance uniformity on LCD surface is then expressed as : ΔY9 = Minimum Luminance of 9 points / Maximum Luminance of 9points (see FIGURE 2).

Figure 3. Response Time Testing

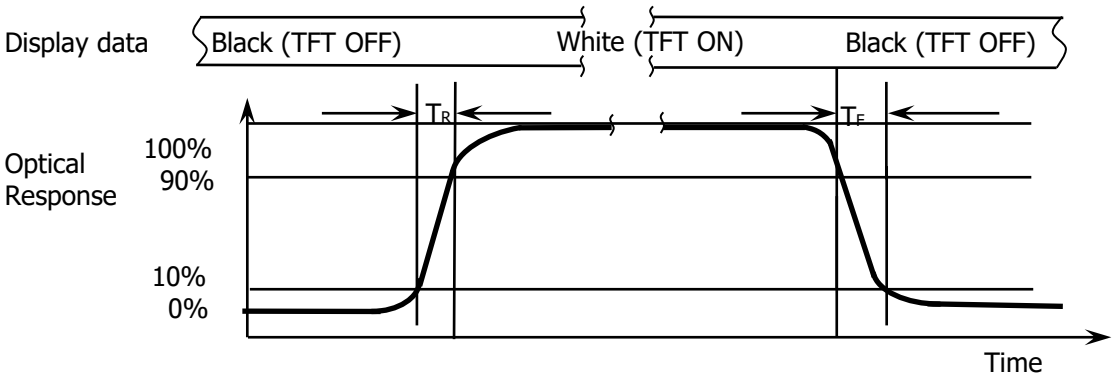

The electro-optical response time measurements shall be made as shown in FIGURE 3 by switching the “data” input signal ON and OFF. The times needed for the luminance to change from 10% to 90% is Tr and 90% to 10% is Td.

8.0 MECHANICAL CHARACTERISTICS

8.0.1 Dimensional Requirements

<Table 6. Dimensional Parameters>

Parameter	Specification	Unit	Remarks
Active area	476.64(H) × 268.11(V)	mm	
Number of pixels	1920(H) ×1080(V)	pixels	
Pixel pitch	0.24825(H) x 0.24825(V)	mm	
Pixel arrangement	RGB Vertical stripe	-	
Display colors	16.7M	colors	
Display mode	Normally Black	-	
Possible Display Type	Landscape and Portrait Enabled	-	
Open Cell Transmittance	3.55	%	
Weight	392	g	
Surface Treatment	Haze 25%, 3H	-	

9.0 RELIABLITY TEST

The Reliability test items and its conditions are shown in below.

<Table 7 Reliability Test Parameters >

No	Test Items	Conditions		Remark
1	High temperature storage test	Ta = 85 ℃, 240 hrs		After test ,The Module can normal operation and have no function problem
2	Low temperature storage test	Ta = -30 ℃, 240 hrs		
3	High temperature & high humidity operation test	Ta = 50 ℃, 80%RH, 240hrs		
4	High temperature & high humidity storage test	Ta = 60 ℃, 90%RH, 240hrs		
5	High temperature operation test	Ta = 85 ℃, 240hrs		
6	Low temperature operation test	Ta = -20℃, 240hrs		
7	Thermal shock	Ta = -20 ℃ ↔ 60 ℃ (0.5 hr), 100 cycle		
8	Packing Vibration Test (non-operating)	Frequency	Random,10 ~ 300 Hz, 30 min/Axis	
		Gravity / AMP	1.05 Grms	
		Period	X, Y, Z 30 min	
9	Shock test (non-operating)	Gravity	50G	
		Pulse width	11msec, sine wave	
		Direction	±X, ±Y, ±Z Once for each	
10	Electro-static discharge test	Air : 150 pF, 330Ω, 15 KV Contact : 150 pF, 330Ω, 8 KV		
11	Altitude test	Non Operating: 40000 ft, -10℃ / 24 Hr,25 ℃ / 24 Hr,-10℃ / 24 Hr		
		Operating: 15000 ft, 0℃ / 24 Hr,25℃ / 24 Hr,50℃ / 24 Hr		

10.0 Precautions

Please pay attention to the followings when you use this TFT LCD Panel.

10.1 Mounting Precautions

- (1) Use fingerstalls with soft gloves in order to keep display clean during the incoming inspection and assembly process.
- (2) You must mount a module using specified mounting holes (Details refer to the drawings).
- (3) Please make sure to avoid external forces applied to the Source PCB or FPC and D-IC during the process of handling or assembling. If not, It causes panel damage or malfunction.
- (4) Note that polarizers are very fragile and could be easily damaged. Do not touch, push or rub the exposed polarizers with glass, tweezers or anything harder than HB pencil lead. And please do not rub with dust clothes with chemical treatment.
- (5) Do not pull or fold the source D-IC which connect the source PCB or FPC and the panel.
- Do not pull or fold the LED wire.
- (6) After removing the protective film, when the surface becomes dusty, please wipe gently with absorbent cotton or other soft materials like chamois soaks with alcohol or purified water.
- Do not strong polar solvent because they cause chemical damage to the polarizer.
- (7) Wipe off saliva or water drops as soon as possible. Their long time contact with polarizer causes deformations and color fading.
- (8) Protection film for polarizer on the module shall be slowly peeled off just before use so that the electrostatic charge can be minimized.
- (9) Since the LCD is made of glass, do not apply strong mechanical impact or static load onto it. Handling with care since shock, vibration, and careless handling may seriously affect the product. If it falls from a high place or receives a strong shock, the glass may be broken.
- (10) Do not disassemble the open cell.
- (11) To determine the optimum mounting angle, refer to the viewing angle range in the specification for each model.
- (12) If the customer's set presses the main parts of the LCD, the LCD may show the abnormal display. But this phenomenon does not mean the malfunction of the LCD and should be pressed by the way of mutual agreement.
- (13)Do not drop water or any chemicals onto the LCD’s surface.

10.2 Operating Precautions

- (1) Be careful for condensation at sudden temperature change. Condensation makes damage to polarizer or electrical contacted parts. And after fading condensation, smear or spot will occur.
- (2) Open cell has high frequency circuits. Sufficient suppression to the electromagnetic interference shall be done by system manufacturers. Grounding and shielding methods may be important to minimized the interference.
- (3) The electrochemical reaction caused by DC voltage will lead to LCD degradation, so DC drive should be avoided.
- (4) The LCD open cell use C-MOS LSI drivers, so customers are recommended that any unused input terminal would be connected to Vdd or Vss, do not input any signals before power is turn on, and ground you body, work/assembly area, assembly equipments to protect against static electricity.
- (5) Do not exceed the absolute maximum rating value. (supply voltage variation, input voltage variation, variation in part contents and environmental temperature, and so on) Otherwise the Open cell may be damaged.
- (6) Design the length of cable to connect between the connector for back-light and the converter as short as possible and the shorter cable shall be connected directly.The longer cable between that of back-light and that of converter may cause the luminance of LED to lower and need a higher startup voltage(Vs).
- (7) Connectors are precise devices for connecting PCB and transmitting electrical signals. Operators should insert and unplug Open cell in parallel when assembling Open Cell.
- (8) Do not connect or disconnect the cable to/ from the module at the "Power On" condition.
- (9) When the open cell is operating, do not lose CLK, ENAB signals. If any one these signals is lost, the LCD panel would be damaged.
- (10) Obey the supply voltage sequence. If wrong sequence is applied, the open cell would be damaged.
- (11) Do not re-adjust variable resistor or switch etc.

10.3 Electrostatic Discharge Control

- (1) Since a open cell is composed of electronic circuits, it is not strong to electrostatic discharge. Make certain that treatment persons are connected to ground through wrist band etc. And don’t touch interface pin directly. Keep products as far away from static electricity as possible.
- (2) Avoid the use work clothing made of synthetic fibers. We recommend cotton clothing or other conductivity-treated fibers.

10.4 Precautions for Strong Light Exposure

It is not allowed to store or run directly in strong light or in high temperature and humidity for a long time; Strong light exposure causes degradation of polarizer and color filter.

10.5 Storage Precautions

When storing modules as spares for a long time, the following precautions are necessary.

- (1) The polarizer surface should not come in contact with any other object.
  It is recommended that they be stored in the container in which they were shipped.
  Temperature : 5 ~ 40 ℃
- (2) Humidity : 35 ~ 75 %RH
- (3) Period : 6 months
- (4) Control of ventilation and temperature is necessary.
- (5) Please make sure to protect the product from strong light exposure, water or moisture.
  Be careful for condensation.
- (6) Store in a polyethylene bag with sealed so as not to enter fresh air outside in it.
- (7)Do not store the LCD near organic solvents or corrosive gasses.
- (8) Please keep the Open Cell at a circumstance shown below Fig.

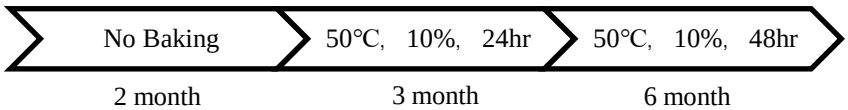

10.6 Precautions for Protection Film

- (1) Remove the protective film slowly, keeping the removing direction approximate

30-degree not vertical from panel surface, If possible, under ESD control device like ion blower, and the humidity of working room should be kept over 50%RH to reduce the risk of static charge.

- (2) In handling the LCD, wear non-charged material gloves. And the conducting wrist to the earth and the conducting shoes to the earth are necessary.

10.7 Appropriate Condition for Display

- (1) Normal operating condition
  - Temperature: 0 ~ 40℃
  - Operating Ambient Humidity : 10 ~ 90 %
  - Display pattern: dynamic pattern (Real display)
  - Suitable operating time: under 16 hours a day.
- (2) Special operating condition

If the product will be used in extreme conditions such as high temperature, humidity, display patterns or 7*24hrs operation time etc.., It is strongly recommended to contact BOE for Application engineering advice. Otherwise, its reliability and function may not be guaranteed.

- (3)Black image or moving image is strongly recommended as a screen save.

- (4) Lifetime in this spec. is guaranteed only when commercial display is used according to operating usages.
- (5) Please contact BOE in advance when you display the same pattern for a long time.
- (6) If the Open cell keeps displaying the same pattern for a long period of time, the image may be “sticked“ or “turn off” to the screen. To avoid image sticking, it is recommended to use a screen saver.
- (7) Do not exceed the absolute maximum rating value. (supply voltage variation, input voltage variation, variation in part contents and environmental temperature, and so on) Otherwise the Open cell may be damaged.
- (8) Dew drop atmosphere should be avoided.
- (9) The storage room should be equipped with a good ventilation facility and avoid to expose to corrosive gas , which has a temperature controlling system.
- (10) When expose to drastic fluctuation of temperature (hot to cold or cold to hot） ,the LCD may be affected; Specifically, drastic temperature fluctuation from cold to hot ,produces dew on the LCD's surface which may affect the operation of the polarizer and the LCD.
- (11) Response time will be extremely delayed at lower temperature than the operating temperature range and on the other hand at higher temperature LCD may turn black at temperature above its operational range. However those phenomena do not mean malfunction or out of order with the LCD. The LCD will revert to normal operation once the temperature returns to the recommended temperature range for normal operation

10.8 Others

A. LC Leak

- If the liquid crystal material leaks from the panel, it is recommended to wash the LC with acetone or ethanol and then burn it.
- In case of contact with hands, skin or clothes, it has to be washed away thoroughly with soap.
- If LC in mouth, mouth need to be washed, drink plenty of water to induce vomiting and follow medical advice.
- If LC touch eyes, eyes need to be washed with running water at least 15 minutes.

B. Rework

- When returning the open cell for repair or etc., Please pack the module not to be broken. We recommend to use the original shipping packages.

11.0 LABEL

(1) Product label

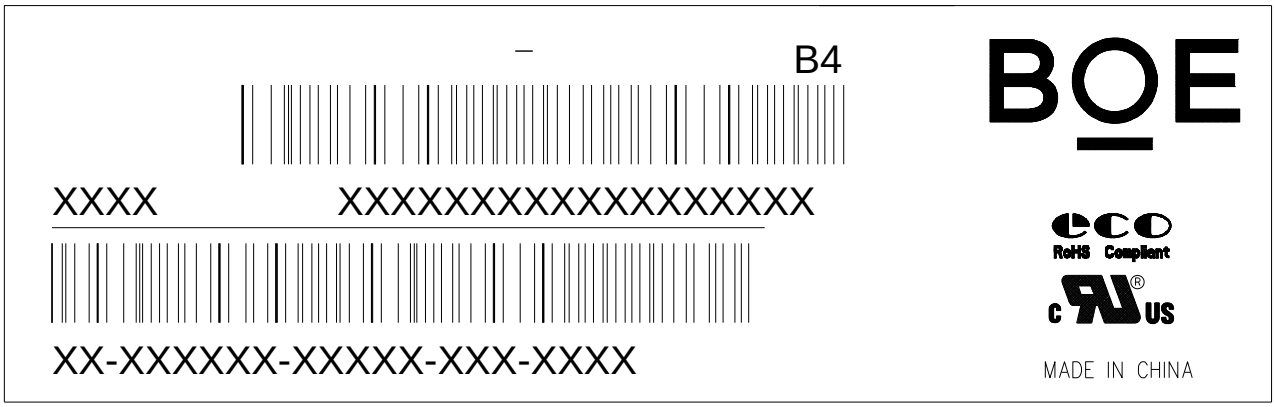

1	2	3	4	5	6	7
X X	X	X	X X	X	X X X X	X X X X X X X

1. Control Number
2. Rank / Grade
3. Line Classification
4. Year (2001 : 01, 2002 : 02, …)
5. Month (1,2,3, … , 9, X, Y, Z)
6. Internal Use
7. Serial Number

(2) High voltage caution label

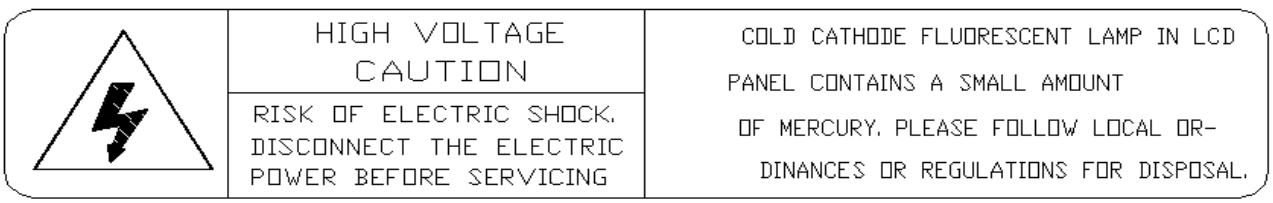

12.0.2 Packing Specification and Note

Item	Specification			Remark
	Q'ty	Dimension(mm)	Weight (kg)	
Open Cell	1	487.2 (H) × 281 (V) × 1.32(D) mm	0.392	-
Box	1	610*460*118 mm	0.575	
Packing Box	20 pcs/Box	554*324*390 mm	9.44	
Pallet	1	1280(L)×1000(W)×130(H)	20	-
Packing Pallet	32Box/Pallet	1280(H)×1000(H)×1048(H)	323	-

13.0 MECHANICAL OUTLINE DIMENSION

Figure 4. TFT-LCD Module Outline Dimensions (Front view，Horizontal placement)

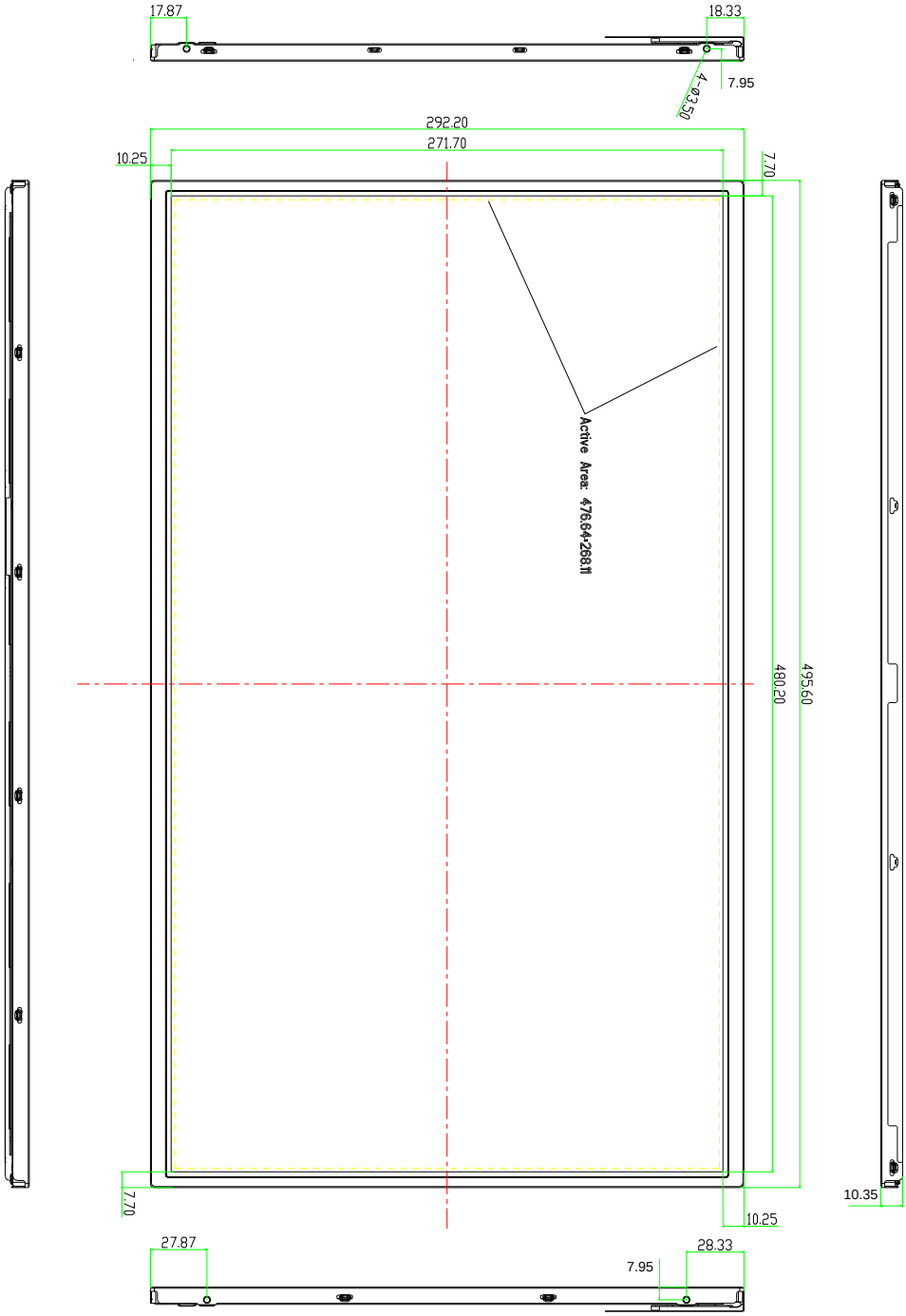

Figure 5. TFT-LCD Module Outline Dimensions (Rear view，Horizontal placement)

